$V_T = .6V$

$k' = 30\ mA/V^2$

$\lambda = 0$

$W/L = 100$

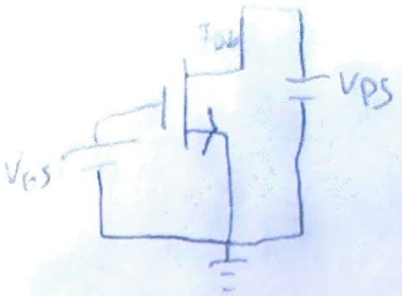

cutoff $I_D = 0$

linear (triode) $I_D = k'\frac{W}{L}\left[(V_{GS}-V_T)V_{DS} - \frac{V_{DS}^2}{2}\right]$

sat. $I_D = \frac{k'}{2}\cdot\frac{W}{L}(V_{GS}-V_T)^2$

a. $V_{GS} < V_T$; cutoff; $I_d = 0A$

b. $V_{GS} < V_T$; cutoff; $I_d = 0A$

c. $V_{GS} = 1V$, $V_{DS} = .4V$

in sat $.4 \geq 1-.6$ saturation

$.4 \geq .4$

$I_D = \frac{30mA}{2}\cdot 100(1-.6)^2 = .24mA$

$V_{ds} \geq V_{GS}-V_T$; saturation;

$I_d = .24mA$

d. $V_{GS} = 1V$, $V_{DS} = 2V$

$2V > 1-.6$

$I_D = \frac{30mA}{2}\cdot 100(1-.6)^2 = .24mA$

$V_{DS} \geq V_G - V_T$; saturation

$I_d = .24mA$

e. $V_{GS} = 2.5V$ $V_{DS} = 1V$

$1 < 2.5-.6$ triode linear

$I_D = \frac{30mA}{V^2}\cdot 100\left((2.5-.6)1 - \frac{1^2}{2}\right)$

$I_D = 4.2\ mA$; $V_{DS} < V_{GS}-V_T$; triode (linear)

f. $V_{GS} = 2.5V$ $V_{DS} = 2.5V$

$V_{DS} \geq V_{GS}-V_T$

$2.5 \geq 1.9$ sat

$I_D = \frac{30mA}{2}\cdot 100(1.9)^2$

$I_D = 5.415\ mA$; $V_{DS} \geq V_{GS}-V_T$; saturation

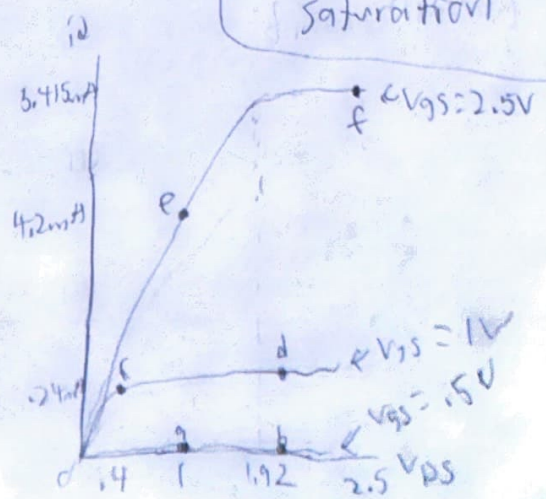

Part 2.

a. + b.

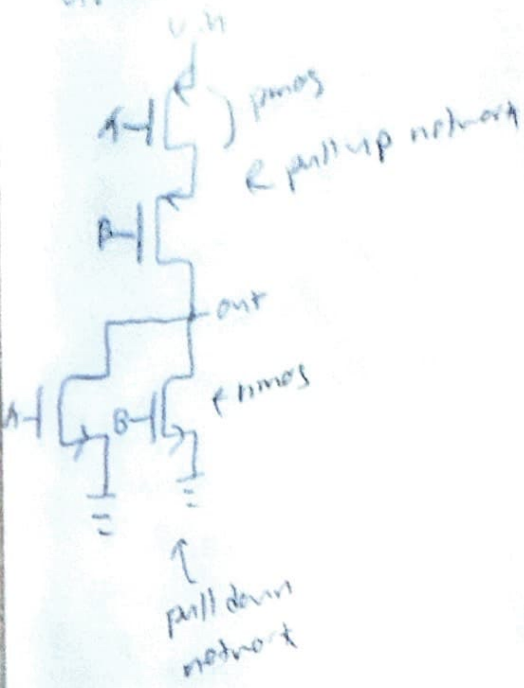

c.

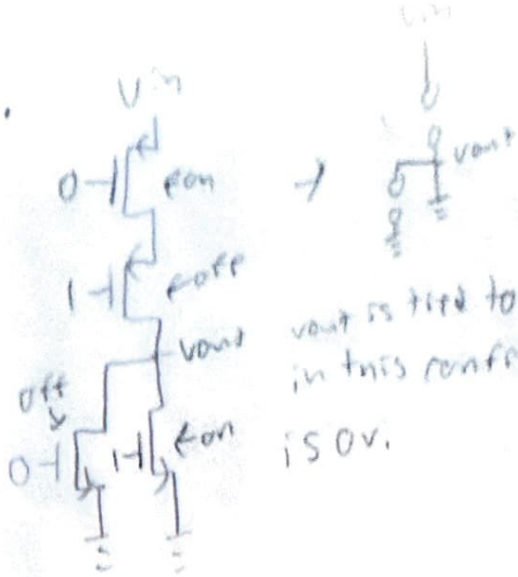

Vout is tied to ground in this config. so output is 0v.

d.

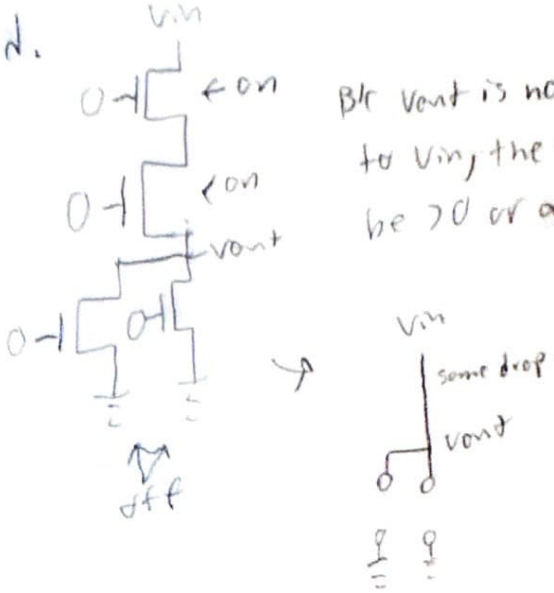

B/c Vout is now tied to Vin, the output will be 70 or a logical one.